INVERTED BUCKET STEAM TRAPS
IB12

DESCRIPTION

The ADCA IB12 is a series of general purpose robust and versatile inverted bucket steam traps manufactured in SG iron.
These steam traps operate intermittently and are suitable for use with saturated or superheated steam.
Typical applications include drip points, steam tracing lines, dryers, chemical and laundry equipment.

MAIN FEATURES

Intermittent discharge.
Discharges condensate at steam temperature.
Unaffected by water hammer and vibrations.
Easy to maintain.

USE: Saturated and superheated steam.

AVAILABLE MODELS: IB12-4, IB12-8 and IB12-12 – SG iron.

SIZES: 1/2" and 3/4"; DN 15 and DN 20.

CONNECTIONS: Female threaded ISO 7 Rp or NPT.
Screw-on flanges EN 1092-2 PN 16/40.
Screw-on flanges ASME B16.42 Class 150.

INSTALLATION: Horizontal installation.
See IMI – Installation and maintenance instructions.

ΔPMX: IB12-4 – 4 bar
IB12-8 – 8 bar
IB12-12 – 12 bar

CE MARKING – GROUP 2 (PED – EUROPEAN DIRECTIVE)	
PN 16	**CATEGORY**
1/2" and 3/4" – DN 15 and 20	SEP

BODY LIMITING CONDITIONS	
THREADED / SCREW-ON FLANGED ALLOWABLE PRESSURE	**RELATED TEMPERATURE**
16 bar	100 ºC
15,5 bar	150 ºC
14,7 bar	200 ºC
13,9 bar	250 ºC

PMO – Maximum operating pressure: 14 bar.
TMO – Maximum operating temperature: 198 ºC.

FLOW RATE CAPACITY (kg/h)												
MODEL	**SIZE**	**DIFFERENTIAL PRESSURE (bar)**										
		1	**2**	**3**	**4**	**5**	**6**	**7**	**8**	**10**	**11**	**12**
IB12-4	**1/2" and 3/4" – DN 15 and 20**	280	390	470	530	–	–	–	–	–	–	–
IB12-8	**1/2" and 3/4" – DN 15 and 20**	190	260	320	360	400	430	460	500	–	–	–
IB12-12	**1/2" and 3/4" – DN 15 and 20**	160	220	260	290	320	360	370	400	440	480	490

We reserve the right to change the design and material of this product without notice.

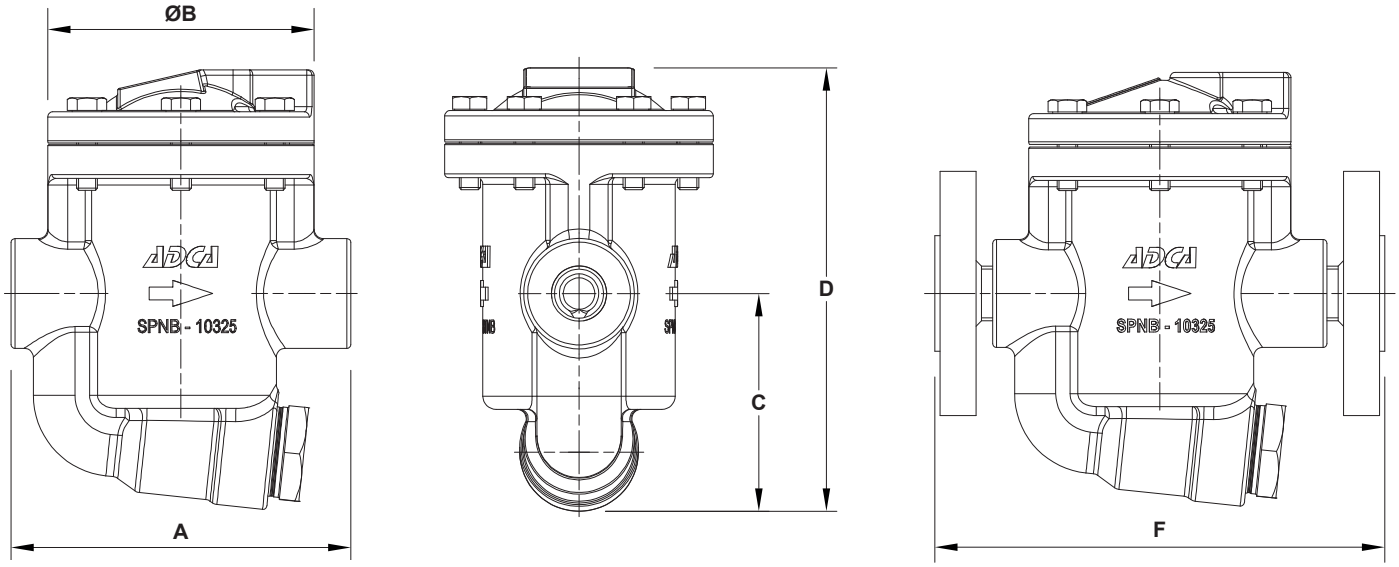

DIMENSIONS (mm)									
SIZE	THREADED					PN 16 / PN 40		CLASS 150	
	A	ØB	C	D	WEIGHT (kg)	F *	WEIGHT (kg)	F *	WEIGHT (kg)
1/2" – DN 15	130	102	83	168	3,9	175	5,3	175	4,7
3/4" – DN 20	130	102	83	168	3,9	175	5,8	175	5

* With screw-on flanges.

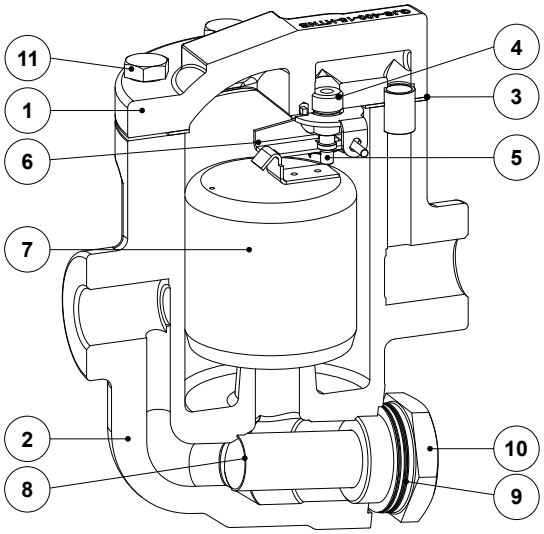

MATERIALS					
POS. No.	DESIGNATION	MATERIAL	POS. No.	DESIGNATION	MATERIAL
1	Body	GJS-400-15 / 0.7040	**7**	* Bucket	AISI 304 / 1.4301
2	Cover	GJS-400-15 / 0.7040	**8**	* Strainer screen	AISI 304 / 1.4301
3	* Gasket	Stainless steel / Graphite	**9**	Gasket	Stainless steel / Graphite
4	* Seat	Hardened stainless steel	**10**	* Strainer cover	A105 / 1.0432
5	* Valve	Hardened stainless steel	**11**	Bolt	Steel 8.8
6	* Lever mechanism	AISI 304 / 1.4301			

* Available spare parts.

We reserve the right to change the design and material of this product without notice.