LRQA CERTIFIED ISO 9001

THERMOSTATIC STEAM TRAPS AND AIR VENTS
TH13A

DESCRIPTION

The ADCA TH13A series of thermostatic steam traps and air vents are specifically designed for use on process equipment such as kettle cookers, sterilizers, food, chemical and laundry equipment.
Their compact design with angled connections makes them ideal for air venting applications.

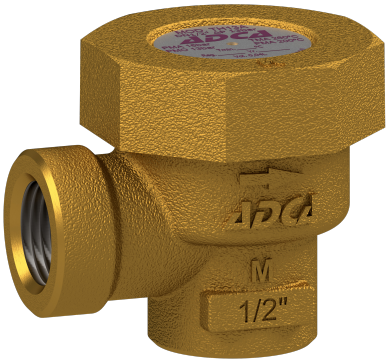

MAIN FEATURES

Modulating discharge.
Discharges condensate close to steam saturation temperature.
Thermostats for different sub coolings (5 to 30 ºC).
Excellent air discharge.
Simple and compact design.
Built-in strainer.

USE: Saturated steam.

AVAILABLE MODELS: TH13A – brass.

SIZES: 1/2".

CONNECTIONS: Female threaded ISO 7 Rp.

INSTALLATION: Angled installation, with the cover at the top. See IMI – Installation and maintenance instructions.

CE MARKING – GROUP 2 (PED – EUROPEAN DIRECTIVE)	
PN 16	**CATEGORY**
1/2"	SEP

LIMITING CONDITIONS	
PMA – Maximum allowable pressure	16 bar
TMA – Maximum allowable temperature	260 ºC
PMO – Maximum operating pressure	13 bar
TMO – Maximum operating temperature	200 ºC

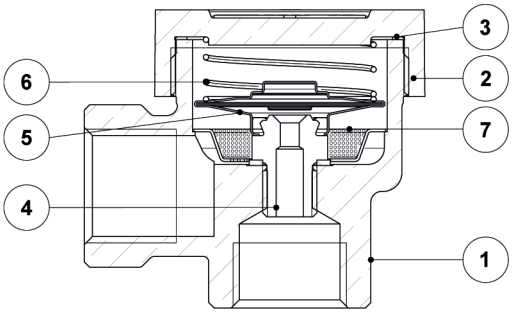

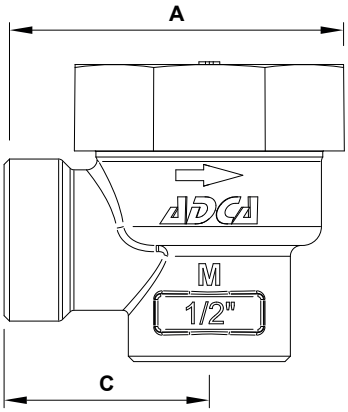

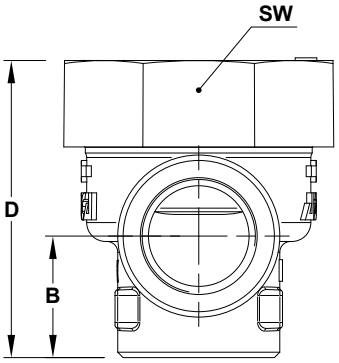

DIMENSIONS (mm)						
SIZE	**A**	**B**	**C**	**D**	**SW**	**WGT. (kg)**
1/2"	63	22,5	38	54	50	0,5

MATERIALS		
POS. No.	**DESIGNATION**	**MATERIAL**
1	Body	Brass EN 12165 / CuZn39Pb2
2	Cover	Brass EN 12165 / CuZn39Pb2
3	* Gasket	Stainless steel / Graphite
4	* Valve seat	AISI 304 / 1.4301
5	* Thermostat	Stainless steel
6	* Spring	AISI 302 / 1.4300
7	* Strainer screen	AISI 304 / 1.4301

* Available spare parts.

FLOW RATE CAPACITY (kg/h)

MODEL	SIZE	DIFFERENTIAL PRESSURE (bar)											
		0,2	**0,3**	**0,5**	**1**	**1,5**	**2**	**3**	**4**	**6**	**8**	**10**	**13**
TH13A	**1/2"**	45	55	70	95	125	135	180	200	270	315	330	360

Capacities shown refer to condensate discharge 10 ºC below steam saturation temperature (standard type S thermostat).
Thermostats for 5 ºC (type H) and 30 ºC (type L) also available. Capacities for cold condensate discharge at 20 ºC are two to three times greater.

We reserve the right to change the design and material of this product without notice.