# THERMOSTATIC STEAM TRAPS AND AIR VENTS
# TH21

DESCRIPTION

The ADCA TH21 series thermostatic steam traps and air vents are specifically designed for use on process equipment such as kettle cookers, sterilizers, food, chemical and laundry equipment.

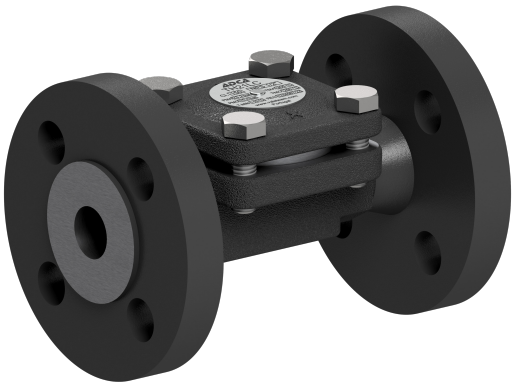

MAIN FEATURES

Modulating discharge.
Discharges condensate close to steam saturation temperature.
Thermostats for different sub coolings (5 to 30 ºC).
Excellent air discharge.
Operates with moderate superheated steam.
Built-in strainer.

USE: Saturated steam.

AVAILABLE MODELS: TH21 – carbon steel.
TH21LC – carbon steel, low capacity.

SIZES: 1/2"; DN 15.

CONNECTIONS: Female threaded ISO 7 Rp or NPT.
Flanged EN 1092-1 PN 25.
Flanged ASME B16.5 Class 150.
Socket weld (SW) ASME B16.11.
Butt weld (BW) ASME B16.25 on request.

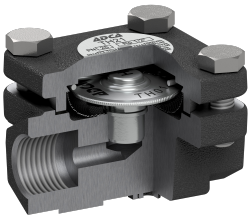

| CE MARKING – GROUP 2 (PED – EUROPEAN DIRECTIVE) | |
|---|---|
| **PN 25** | **CATEGORY** |
| 1/2" – DN 15 | SEP |

| BODY LIMITING CONDITIONS | | |
|---|---|---|
| **FLANGED PN 25 *** | **FLANGED CLASS 150 **** | **RELATED TEMPERATURE** |
| **ALLOWABLE PRESSURE** | **ALLOWABLE PRESSURE** | |
| 23,2 bar | 15,4 bar | 100 ºC |
| 20,8 bar | 13,8 bar | 200 ºC |
| 19 bar | 12,1 bar | 250 ºC |

PMO – Maximum operating pressure: 21 bar.
TMO – Maximum operating temperature: 250 ºC.
* According to EN 1092-1:2018.
** According to EN 1759-1:2004.
Body limiting conditions PN 25 or below, depending on the type of connection adopted. Rating PN 25 for threaded version.



We reserve the right to change the design and material of this product without notice.

LRQA CERTIFIED ISO 9001

ADCA

| FLOW RATE CAPACITY (kg/h) | | | | | | | | | | | | | | | | |
|---|---|---|---|---|---|---|---|---|---|---|---|---|---|---|---|---|
| MODEL | SIZE | DIFFERENTIAL PRESSURE (bar) | | | | | | | | | | | | | | |
| | | 0,2 | 0,3 | 0,5 | 1 | 1,5 | 2 | 3 | 4 | 6 | 8 | 10 | 13 | 15 | 20 | 21 |
| **TH21** | **1/2" – DN 15** | 70 | 120 | 140 | 255 | 330 | 385 | 455 | 510 | 600 | 670 | 700 | 720 | 750 | 775 | 795 |
| **TH21LC** | **1/2" – DN 15** | 45 | 55 | 70 | 95 | 125 | 135 | 180 | 200 | 270 | 315 | 330 | 360 | 370 | 405 | 415 |

Capacities shown refer to condensate discharge 10 ºC below steam saturation temperature (standard type S thermostat).
Thermostats for 5 ºC (type H) and 30 ºC (type L) also available. Capacities for cold condensate discharge at 20 ºC are two to three times greater.

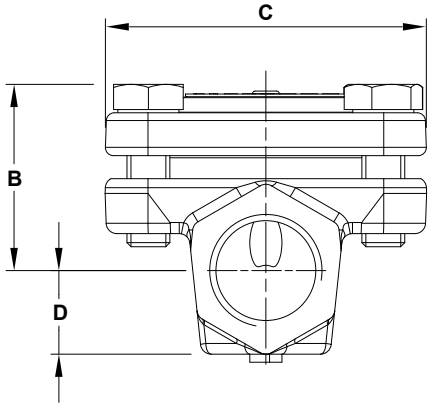


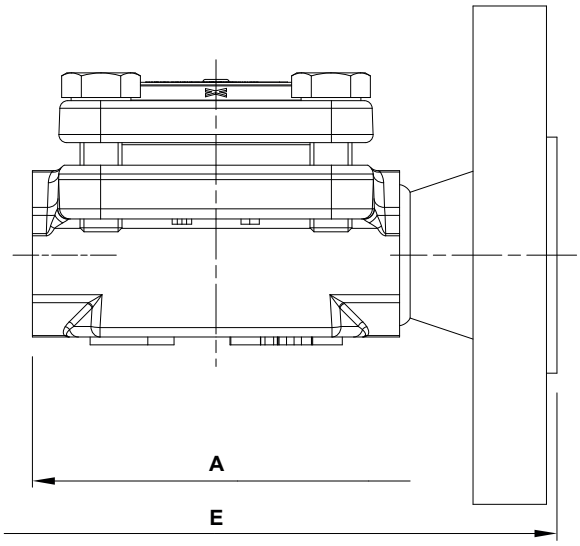


| DIMENSIONS (mm) | | | | | | | | | |
|---|---|---|---|---|---|---|---|---|---|
| SIZE | THREADED | | | | | PN 25 | | CLASS 150 | |
| | A | B | C | D | WGT. (kg) | E * | WGT. (kg) | E * | WGT. (kg) |
| **1/2" – DN 15** | 70 | 35 | 60 | 15 | 0,7 | 130 | 2,2 | 150 | 1,7 |

* Other face to face dimensions on request.

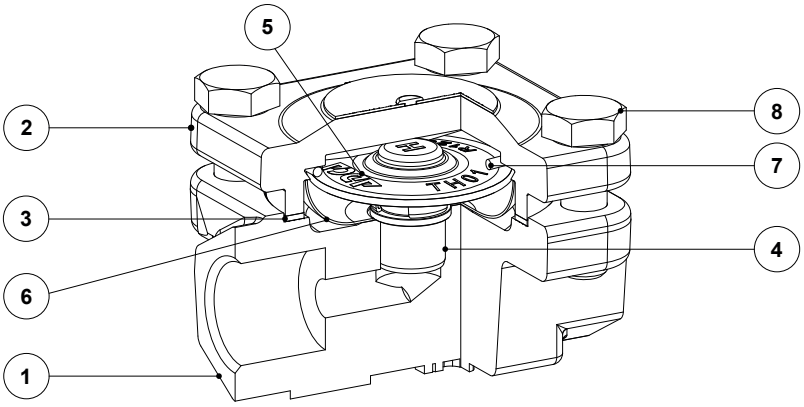


| MATERIALS | | | | | |
|---|---|---|---|---|---|
| POS. No. | DESIGNATION | MATERIAL | POS. No. | DESIGNATION | MATERIAL |
| **1** | Body | P250GH / 1.0460 | **5** | * Thermostatic element | Stainless steel |
| **2** | Cover | P250GH / 1.0460 | **6** | * Strainer screen | AISI 304 / 1.4301 |
| **3** | * Gasket | Stainless steel / Graphite | **7** | * Spring | AISI 302 / 1.4300 |
| **4** | Valve seat | AISI 304 / 1.4301 | **8** | Bolt | Steel 8.8 |

* Available spare parts.