PILOT OPERATED PRESSURE SUSTAINING VALVES
PS47

DESCRIPTION

The ADCA PS47 pilot operated pressure sustaining valves are designed for use with steam, compressed air, nitrogen and other gases compatible with the construction materials.
The PS47 accurately senses upstream pressure and acts to precisely control it to a minimum or disperse excess pressure.

MAIN FEATURES

Precise control of upstream pressure from 0,07 bar to 17 bar.
Robust steel or stainless steel construction.
Guided piston and valve stem.
Hardened plug.

OPTIONS: Soft sealing.
Low pressure diaphragm.
Dome-loading
Top cap (adjustment screw with cover).
Bottom cover drain connection.
Stellited plug and seat.
External sensing line connection.

USE: Saturated steam, compressed air and other gases (Group 2) compatible with the construction (except oxygen).

AVAILABLE MODELS: PS47 – steel versions for steam.
PS47i – stainless steel versions for steam (only available from DN 15 to DN 50).
PS47G – steel versions for compressed air and gases.
PS47Gi – stainless steel versions for compressed air and gases.

SIZES: 1/2" to 2"; DN 15 to DN 50.

CONNECTIONS: Flanged EN 1092-1 PN 40.
Flanged ASME B16.5 Class 150 or 300.
Female threaded ISO 7 Rp or NPT.
Socket weld (SW) ASME B16.11.

INSTALLATION: Horizontal installation.
See IMI – Installation and maintenance instructions.
In steam applications, a “Y” strainer, humidity separator and steam trap should be installed upstream of the valve.

CE MARKING – GROUP 2 (PED – EUROPEAN DIRECTIVE)		
CLASS 150	**PN 40**	**CATEGORY**
1/2" to 2"	DN 15 to 32 1/2" to 11/4"	SEP
–	DN 40 to 50 11/2" to 2"	1 (CE marked)

We reserve the right to change the design and material of this product without notice.

LIMITING CONDITIONS	
MODEL	**PS47 and PS47i**
Body design conditions	PN 40
Maximum upstream pressure	17 bar
Minimum upstream pressure *	0,35 bar
Maximum downstream pressure	17 bar
Maximum operating temperature **	250 ºC
Maximum hydraulic factory valve body test	60 bar

* 0,07 bar with low pressure diaphragm (limited to 2,5 bar maximum inlet pressure).
** See "Ordering Codes" table for restrictions.
Warning: A pressure sustaining valve is not a safety relief valve and must not be used for that purpose!

REGULATING RANGES				
SPRING COLOUR	**GREEN W/ 1 DIAPHRAGM**	**BLUE W/ 1 DIAPHRAGM**	**RED W/ 2 DIAPHRAGMS**	**BLACK W/ 2 DIAPHRAGMS**
Regulating range	0,07 to 0,5 bar * 0,35 to 2 bar	1,5 to 5,5 bar	3,5 to 8,5 bar	7 to 17 bar

* With low pressure diaphragm.

OPTIONS				
LOW PRESSURE DIAPHRAGM	**DOME-LOADING**	**TOP CAP**	**BOTTOM COVER DRAIN CONNECTION**	**EXTERNAL SENSING LINE CONNECTION**

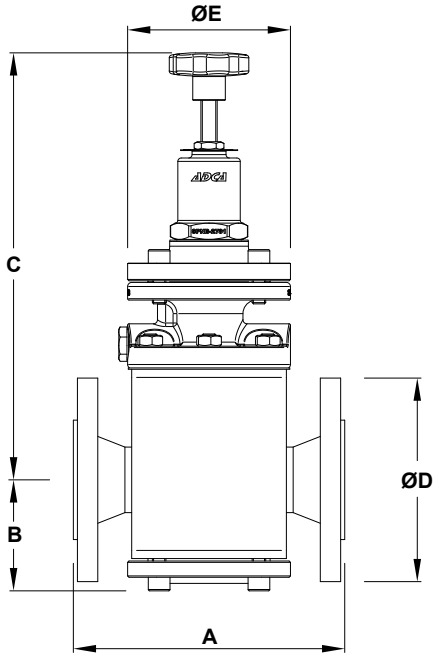

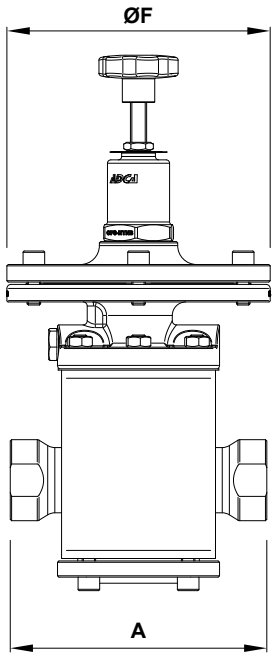

Optional low pressure diaphragm

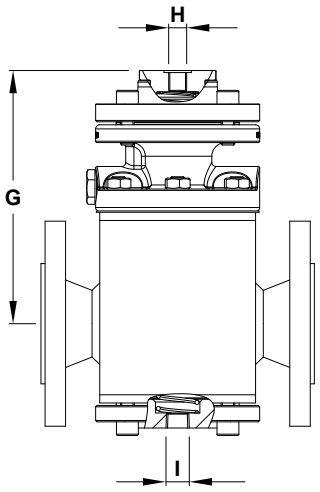

Optional dome-loading and drain connection

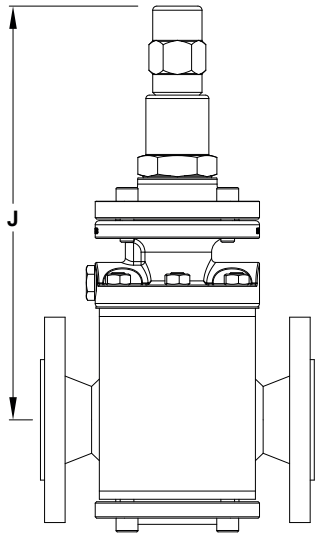

Optional top cap

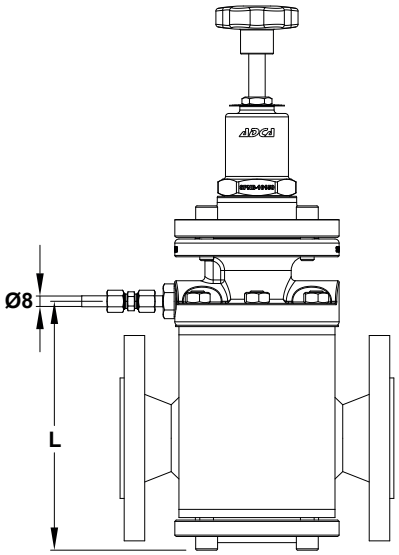

Optional external sensing line connection

DIMENSIONS (mm)															
SIZE	PN 40	CLASS 150	CLASS 300	THREADED	B	C	ØD	ØE	ØF	G	H	I *	J	L	WGT. (kg)
	A														
1/2" – DN 15	150	184	190	140	56	275	95	120	195	162	1/4"	3/8"	276	143	13
3/4" – DN 20	150	184	194	140	56	287	105	120	195	174	1/4"	3/8"	276	143	13,5
1" – DN 25	160	184	197	150	56	287	115	120	195	174	1/4"	3/8"	276	143	14
11/4" – DN 32	180	–	–	170	68	299	140	120	195	186	1/4"	3/8"	293	169	18
11/2" – DN 40	200	222	235	190	75	307	150	130	195	194	1/4"	3/8"	302	181	22
2" – DN 50	230	254	267	230	84	323	165	160	195	210	1/4"	3/8"	333	228	31

* Optional drain connection for steam trapping. This drain connection does not replace the humidity separator, but can be useful if, e.g., the valve stops operating for long periods of time.

Remarks: As standard, connections H and I, in valves manufactured with ASME B16.5 flanges, SW or NPT threads, are female threaded NPT. In valves manufactured with EN 1092-1 flanges or ISO 228 threads, these connections are also female threaded ISO 228.

We reserve the right to change the design and material of this product without notice.

MATERIALS

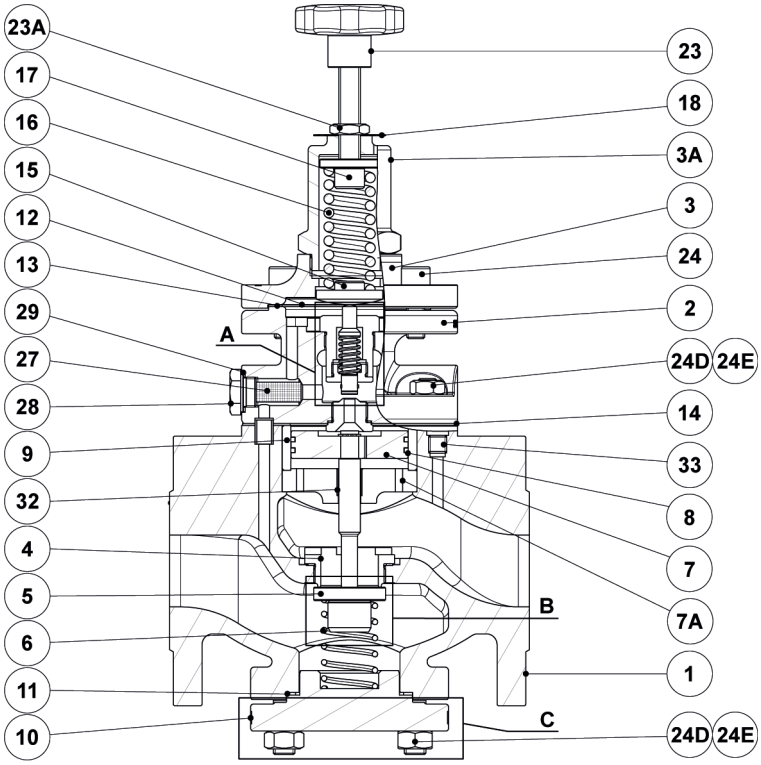

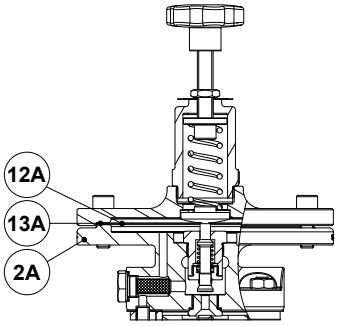

Optional low pressure diaphragm

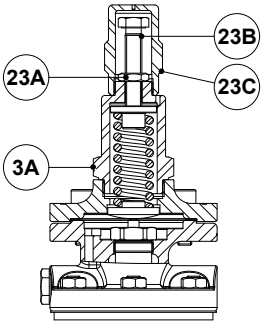

Optional top cap

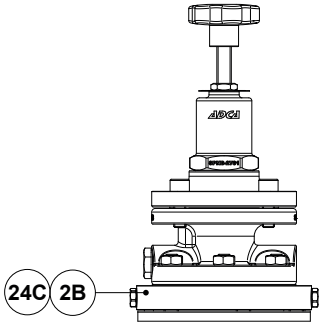

Adapting flange (DN50)

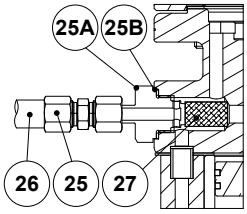

Optional external sensing line connection

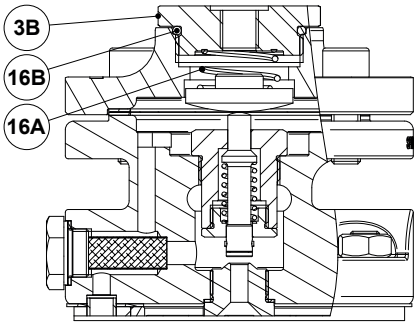

Optional dome-loading

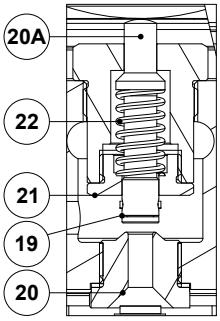

Detail A
Pilot valve

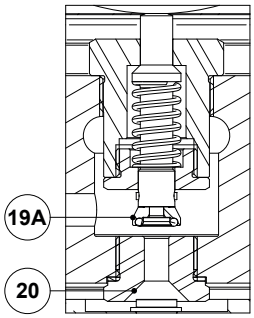

Detail A
Pilot valve (soft)

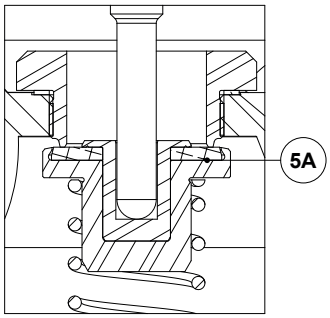

Detail B
Main valve (soft)

We reserve the right to change the design and material of this product without notice.

LRQA CERTIFIED ISO 9001

ADCA

MATERIALS			
POS. No.	**DESIGNATION**	**PS47**	**PS47i**
1	Valve body	S355JR / 1.0045; P250GH / 1.0460	AISI 316 / 1.4401
2	Pilot valve body	A216 WCB; A351 CF8 / 1.4308	A351 CF8 / 1.4308
2A	Low pressure pilot valve body	A216 WCB; A351 CF8 / 1.4308	A351 CF8 / 1.4308
2B	Adapting flange	C45E / 1.1191	AISI 316 / 1.4401
3	Top cover	A216 WCB; A351 CF8 / 1.4308	A351 CF8 / 1.4308
3A	Spring cover	A216 WCB; A351 CF8 / 1.4308	A351 CF8 / 1.4308
3B	Dome-loading cover	C45E / 1.1191	AISI 316 / 1.4401
4	* Main valve seat	AISI 316 / 1.4401	AISI 316 / 1.4401
5	* Main valve plug	Hardened stainless steel	Hardened stainless steel
5A	* Main valve plug (soft)	AISI 316 w/ PTFE/GR; Rulon	AISI 316 w/ PTFE/GR; Rulon
6	* Main valve spring	AISI 302 / 1.4300	AISI 302 / 1.4300
7	* Piston	Brass / Bronze	Brass / Bronze
7A	Piston guide	AISI 316 / 1.4401	AISI 316 / 1.4401
8	* Piston ring	Bronze / FKM / EPDM / NBR	Bronze / FKM / EPDM / NBR
9	Piston liner	AISI 304 / 1.4301	AISI 304 / 1.4301
10	Bottom cover	S355JR / 1.0045	AISI 316 / 1.4401
11	* Bottom cover gasket	Stainless steel / Graphite	Stainless steel / Graphite
12	* Diaphragm	AISI 301 / 1.4310	AISI 301 / 1.4310
12A	* Low pressure diaphragm	AISI 301 / 1.4310	AISI 301 / 1.4310
13	* Diaphragm gasket	Compressed synthetic fibers	Compressed synthetic fibers
13A	* Low pressure diaphragm gasket	Compressed synthetic fibers	Compressed synthetic fibers
14	* Pilot valve gasket	Stainless steel / Graphite	Stainless steel / Graphite
15	Lower spring carrier	Brass	Brass
16	* Adjustment spring	Steel	Steel
16A	Diaphragm spring	Stainless steel	Stainless steel
16B	O-ring	FPM	FPM
17	Top spring carrier	Brass	Brass
18	Spring identification plate	Aluminium	Aluminium
19	* Pilot valve plug	AISI 316 / 1.4401	AISI 316 / 1.4401
19A	* Pilot valve plug (soft)	PTFE/GR; Rulon, etc.	PTFE/GR; Rulon, etc.
20	* Pilot valve seat	AISI 316 / 1.4401	AISI 316 / 1.4401
21	* Pilot valve body	A351 CF8 / 1.4308	Copper / PTFE
22	* Pilot valve spring	AISI 302 / 1.4300	AISI 302 / 1.4300
23	Adjustment knob	Plastic / Stainless steel	Plastic / Stainless steel
23A	Lock nut	AISI 304 / 1.4301	AISI 304 / 1.4301
23B	Bolt	Stainless steel A2-70	Stainless steel A2-70
23C	Cover	AISI 303 / 1.4305	AISI 303 / 1.4305
24	Bolt	ISO 898 or EN 10269 steel	ISO 3506 stainless steel
24C	Bolt	ISO 898 or EN 10269 steel	ISO 3506 stainless steel
24D	Stud	ISO 898 or EN 10269 steel	ISO 3506 stainless steel
24E	Nut	ISO 898 or EN 10269 steel	ISO 3506 stainless steel
25	Compression fitting	Plated carbon steel	Stainless steel
25A	Adapter	AISI 304 / 1.4301	AISI 304 / 1.4301
25B	Gasket	Copper	Copper
26	Sensing pipe	Copper	Stainless steel
27	* Pilot valve strainer	AISI 304 / 1.4301	AISI 304 / 1.4301
28	Strainer nut	AISI 304 / 1.4301	AISI 304 / 1.4301
29	Gasket	Copper	Copper / PTFE
33	Socket set screw	Stainless steel	Stainless steel

* Available spare parts.

LRQA CERTIFIED ISO 9001

ADCA

CAPACITY TABLE

INLET (barg)	OUTLET (barg)	SATURATED STEAM (kg/h)						COMPRESSED AIR (Nm³/h – 0 ºC – 1,013 bar)					
		DN 15	DN 20	DN 25	DN 32	DN 40	DN 50	DN 15	DN 20	DN 25	DN 32	DN 40	DN 50
0,7	0,35	40	75	125	190	280	480	15	31	50	70	111	191
1	0,4	45	95	160	240	355	620	16	33	51	79	113	194
	0,6	40	83	140	210	308	535	27	55	90	138	199	343
2	0,4 – 1	75	150	250	380	545	960	60	122	201	307	444	763
	1,2	65	138	230	345	515	900	54	109	180	276	399	686
	1,6	50	105	175	265	393	685	45	91	150	230	333	572
3	0,4 – 1,5	100	200	335	510	750	1310	120	240	300	460	666	1150
	2	85	170	290	450	660	1155	105	210	251	384	555	1050
	2,2	80	165	277	416	613	1050	48	93	152	232	334	570
	2,6	60	127	203	315	467	818	45	61	101	154	223	384
4	0,4 – 2	125	250	420	630	920	1580	150	238	499	739	1089	1825
	2,5	114	225	385	580	850	1465	135	208	449	568	978	1635
	3,2	92	183	309	482	708	1205	119	177	398	492	867	1444
	3,6	68	137	237	353	536	932	60	124	202	154	444	763
5	0,4 – 2	150	310	512	755	1114	1895	180	360	505	768	1110	1908
	3	144	295	488	743	1095	1835	165	330	556	691	997	1716
	4	115	225	373	578	846	1430	151	298	404	613	885	1526
	4,2	105	213	343	525	770	1342	136	285	383	582	840	1449
6	0,4 – 3	175	355	602	919	1358	2298	210	468	696	1046	1523	2580
	4	159	314	538	827	1217	2142	195	437	646	969	1412	2389
	5	119	250	411	637	941	1644	150	345	494	738	1079	1817
	5,2	109	217	360	568	839	1465	135	315	443	664	968	1627
7	0,4 – 3,5	197	410	670	1005	1540	2644	240	480	804	1200	1740	2989
	5	178	358	587	908	1345	2306	210	421	701	1046	1524	2640
	6	132	271	452	688	1027	1773	150	301	499	756	1104	1829
	6,2	122	251	416	635	934	1618	105	211	349	529	773	1280
8	0,4 – 4	225	471	778	1169	1759	3043	270	546	798	1353	1746	3411
	5	221	339	730	1118	1659	2884	265	516	747	1276	1635	3220
	6	192	385	639	976	1451	2513	225	449	710	1125	1635	2762
	7	146	293	481	732	1085	1887	180	361	600	892	1296	2184
	7,2	137	274	453	692	1011	1782	156	312	540	768	1128	1978
9	0,4 – 5	251	518	856	1325	1923	3358	301	612	1011	1507	2244	3789
	6	241	500	788	1222	1766	3095	270	553	910	1359	1980	3474
	7	206	398	679	1068	1559	2676	240	492	816	1230	1798	2970
	8	156	314	514	794	1142	2053	180	360	598	903	1288	2247
	8,2	145	292	483	741	1090	1888	165	329	547	826	1176	2056
10	0,4 – 5	275	561	944	1468	2127	3718	330	659	1116	1692	2412	4173
	6	272	551	917	1419	2074	3619	314	628	1065	1615	2301	3983
	7	252	508	838	1268	1871	3249	288	599	1004	1503	2202	3810
	8	213	431	722	1118	1659	2831	240	492	806	1212	1770	3022
	9	163	333	548	843	1244	2152	192	360	658	898	1350	2280
	9,2	150	298	493	756	1143	1929	181	342	628	852	1283	2165
12	1 – 6	330	680	1124	1732	2541	4407	390	792	1300	1978	2844	4917
	8	311	629	1023	1575	2332	4034	360	732	1219	1827	2622	4497
	10	265	533	812	1271	1867	3202	270	553	910	1359	1980	3474
	11	175	364	568	924	1350	2359	210	468	696	1046	1523	2580
15	1 – 8	408	839	1373	2138	3118	5403	480	972	1602	2427	3564	6072
	12	339	656	1068	1629	2441	4250	375	762	1272	1923	2784	4692
	14	199	401	662	1017	1503	2619	255	528	889	1332	1896	3398
17	1 – 9	425	863	1460	2178	3165	5343	540	912	1819	2737	3984	6618
	15	347	709	1190	1816	2694	4712	315	708	1179	1764	2520	4418
	16	207	416	717	1217	1608	2824	255	528	889	1332	1896	3398

Remarks: A pressure sustaining valve is usually sized to the minimum allowable pressure drop across the valve.

We reserve the right to change the design and material of this product without notice.

LRQA CERTIFIED ISO 9001

ADCA

ORDERING CODES PS47

VALVE MODEL	PS.47			S.	1			1.	A	15	
PS47 – Steam (standard)	**PS.47**										
PS47G – Compressed air and gases	**PS.47G**										
BODY MATERIAL											
S355JR / 1.0045 or P250GH / 1.0460 carbon steel		**(1)**									
AISI 316 / 1.4401 stainless steel		**I**									
OPTIONS											
Standard valve with internal sensing line			**(1)**								
Valve with external sensing line connection			**B**								
DIAPHRAGM											
Standard diaphragm				**S.**							
Low pressure diaphragm				**L.**							
REGULATING RANGE											
Green spring – 0,35 to 2 bar (0,07 to 0,5 bar with low pressure diaphragm) – single diaphragm					**1**						
Blue spring – 1,5 to 5,5 bar – single diaphragm					**2**						
Red spring – 3,5 to 8,5 bar – double diaphragm					**3**						
Black spring – 7 to 17 bar – double diaphragm					**4**						
0,35 to 4 bar – single diaphragm (dome-loading) **(a)**					**6**						
2 to 17 bar – double diaphragm (dome-loading) **(a)**					**7**						
PISTON RINGS (b)											
Bronze						**(1)**					
FPM – Tmax 200 ºC						**V**					
EPDM – Tmax 130 ºC						**E**					
NBR – Tmax 80 ºC						**N**					
DRAIN CONNECTION AND TOP CAP											
None							**(1)**				
Drain connection ISO 228 3/8"							**D**				
Drain connection 3/8" NPT							**E**				
Top cap (adjustment screw with cover)							**G**				
Top cap and drain connection ISO 228 3/8"							**H**				
Top cap and drain connection 3/8" NPT							**I**				
VALVE SEALING											
Standard metal to metal with hardened plug								**1.**			
Stellited plug and seat								**2.**			
Soft sealed with virgin PTFE – Tmax 180 ºC								**3.**			
Soft sealed with PTFE/GR – Tmax 200 ºC								**4.**			
Soft sealed with Rulon® – Tmax 220 ºC								**5.**			
Soft sealed with FPM – Tmax 200 ºC								**6.**			
PIPE CONNECTIONS											
Threaded ISO 228									**A**		
Threaded NPT ASME B1.20.1									**C**		
Socket weld (SW) ASME B16.11									**H**		
Flanged EN 1092-1 PN 40									**N**		
Flanged ASME B16.5 Class 150									**U**		
Flanged ASME B16.5 Class 300									**V**		
SIZE											
DN 15 or 1/2"										**15**	
DN 20 or 3/4"										**20**	
...											
SPECIAL CONSTRUCTION / ADDITIONAL OPTIONS											
A full description must to be provided and validated in case of a non-standard construction											**E**

(1) Omitted if a standard valve is requested.
(a) The loading control pressure is approximately the same as the required upstream set-point pressure (± 0,2 bar).

We reserve the right to change the design and material of this product without notice.