FLOAT AND THERMOSTATIC STEAM TRAPS
FLT16

DESCRIPTION

The ADCA FLT16 is a series of float and thermostatic steam traps with integral air vent designed for modulating discharge of condensate, ensuring maximum system heat transfer.
Typical applications include unit heaters, heat exchangers, dryers, jacketed vessels and other applications where continuous discharge is essential.

MAIN FEATURES

Modulating discharge of condensate at steam temperature.
Unaffected by sudden or wide load and pressure variations.
No backing-up with condensate.
Excellent air discharge through its integrated air vent.

OPTIONS: Equalizing (vent) and drain connections.
SLR – Steam lock release.
HVV – Hand vent valve.
BDV – Blowdown valve.
AFZ – Anti-freeze device.
VB21M – Vacuum breaker.

USE: Saturated and superheated steam.

AVAILABLE MODELS: FLT16-4,5 , FLT16-10 and FLT16-14 – SG iron.

SIZES: 1/2" and 3/4"; DN 15 and DN 20.

CONNECTIONS: Female threaded ISO 7 Rp or NPT.
Flanged EN 1092-2 PN 16.

INSTALLATION: Inline horizontal or vertical installation.
See IMI – Installation and maintenance instructions.

ΔPMX: FLT16-4,5 – 4,5 bar
FLT16-10 – 10 bar
FLT16-14 – 14 bar

CE MARKING – GROUP 2 (PED – EUROPEAN DIRECTIVE)	
PN 16	**CATEGORY**
1/2" and 3/4" DN 15 and 20	SEP

BODY LIMITING CONDITIONS *	
ALLOW. PRESSURE	**REL. TEMPERATURE**
16 bar	100 ºC
15,5 bar	150 ºC
14,7 bar	200 ºC
13,9 bar	250 ºC

PMO – Maximum operating pressure: 14 bar.
TMO – Maximum operating temperature: 198 ºC.
* According to EN 1092-2:2018.

We reserve the right to change the design and material of this product without notice.

FLOW RATE CAPACITY (kg/h)														
MODEL	SIZE	DIFFERENTIAL PRESSURE (bar)												
		0,5	1	1,5	2	3	4,5	6	7	8	9	10	12	14
FLT16-4,5	1/2" and 3/4" – DN 15 and 20	200	280	320	360	400	495	–	–	–	–	–	–	–
FLT16-10	1/2" and 3/4" – DN 15 and 20	110	140	175	190	230	280	300	330	350	390	405	–	–
FLT16-14	1/2" and 3/4" – DN 15 and 20	70	100	120	140	155	190	210	220	225	230	260	280	300

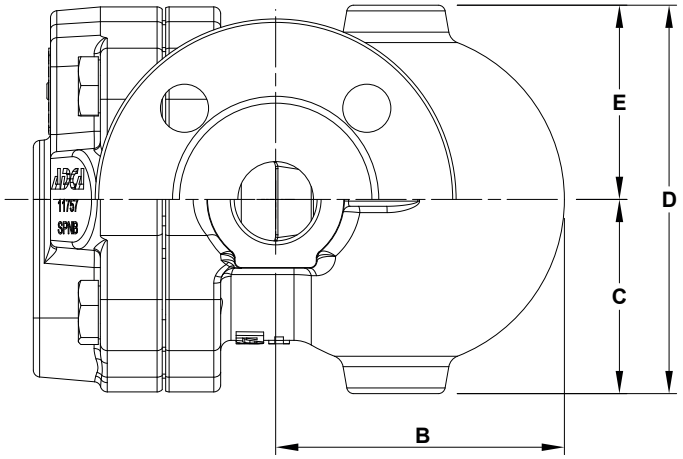

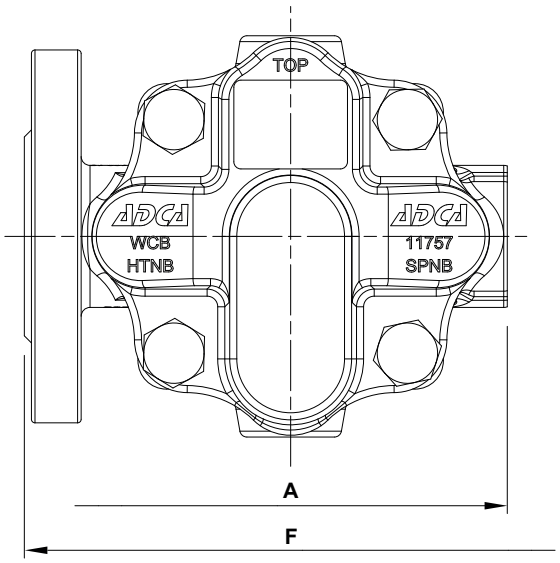

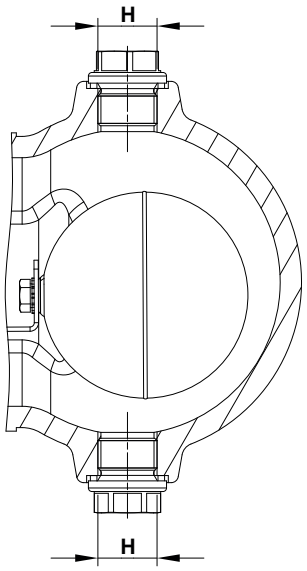

DIMENSIONS (mm)										
SIZE	THREADED							PN 16		
	A	B	C	D	E	H *	WEIGHT (kg)	E	F	WEIGHT (kg)
1/2" – DN 15	122	84	56,5	113	56,5	3/8"	4,2	56,5	150	4,9
3/4" – DN 20	122	84	56,5	113	56,5	3/8"	4,2	56,5	150	5,3

* As standard, in versions with EN flanges or female ISO 7 Rp threads, these connections are female threaded ISO 228. In versions with female NPT threads, these connections are female threaded NPT.

We reserve the right to change the design and material of this product without notice.

MATERIALS

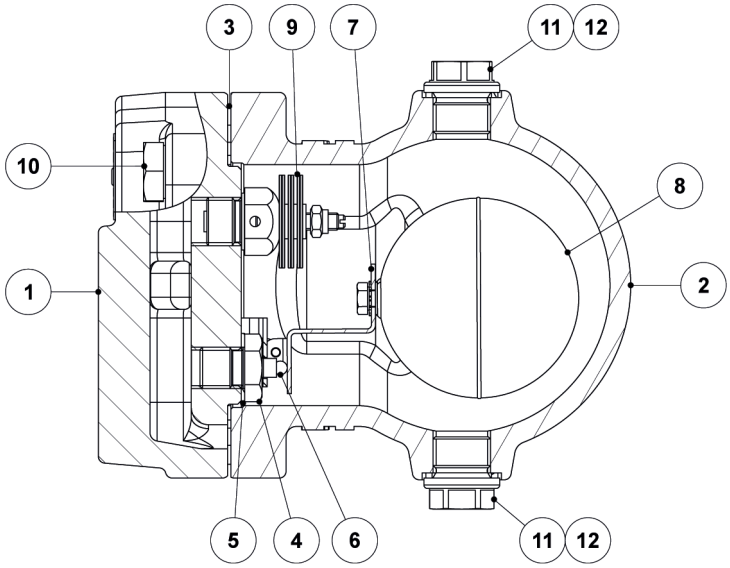

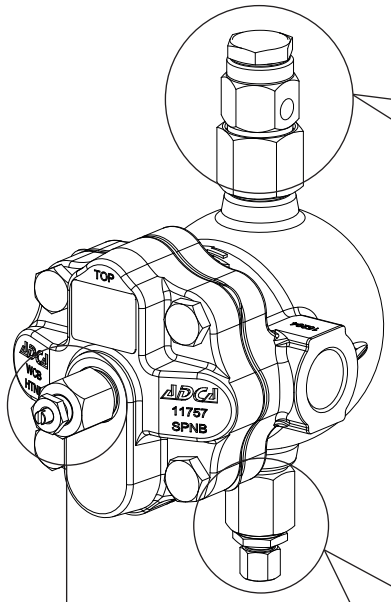

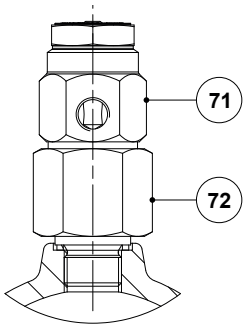

Optional vacuum breaker (VB21M)

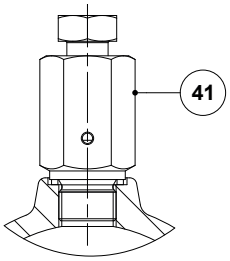

Optional hand vent valve (HVV)

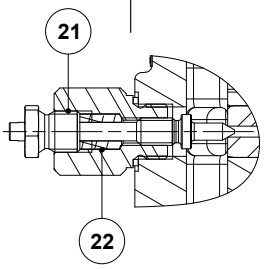

Optional steam lock release (SLR)

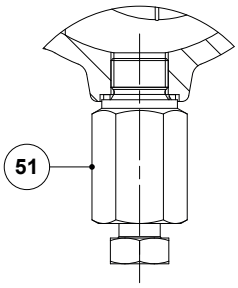

Optional blowdown valve (BDV); Manual

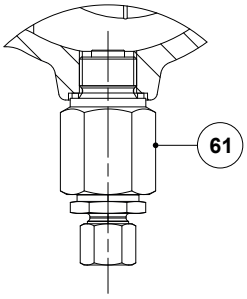

Optional anti-freeze device (AFZ); Automatic

We reserve the right to change the design and material of this product without notice.

MATERIALS		
POS. No.	**DESIGNATION**	**MATERIAL**
1	Body	GJS-400-15 / 0.7040
2	Cover	GJS-400-15 / 0.7040
3	* Gasket	Stainless steel / Graphite
4	* Seat	AISI 410 / 1.4006
5	* Gasket	AISI 304 / 1.4301
6	* Valve	AISI 440C / 1.4125
7	* Lever	AISI 304 / 1.4301
8	* Float	AISI 304 / 1.4301
9	* Automatic air vent	Stainless steel; Bimetal
10	Bolt	Zinc plated steel
11	Plug	AISI 316L / 1.4404
12	** Gasket	Copper; AISI 304 / 1.4301
21	Steam lock release	AISI 420 / 1.4021; AISI 316L / 1.4404
22	Packing	Graphite
41	Hand vent valve	AISI 303 / 1.4305; AISI 316L / 1.4404
51	Blowdown valve	AISI 303 / 1.4305; AISI 316L / 1.4404
61	Anti-freeze device	AISI 303 / 1.4305; AISI 316L / 1.4404
71	Vacuum breaker	AISI 303 / 1.4305
72	Connector	AISI 316L / 1.4404

* Available spare parts; ** Not applicable in NPT version.

FLOW DIRECTION

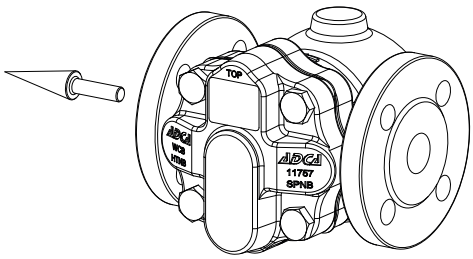

IR – Horizontal from right to left

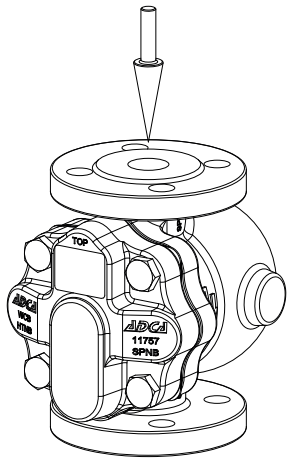

IT – Vertical from top to bottom

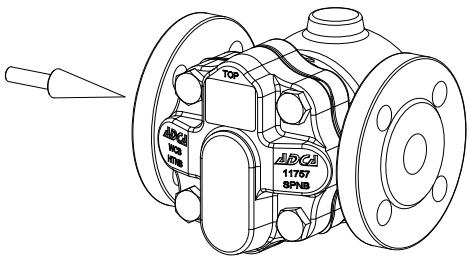

IL – Horizontal from left to right

ORDERING CODES FLT16									
MODEL	**A16**	**2**	**V**	**XX**	**X**	**IR**	**A**	**15**	
FLT16 – SG iron	**A16**								
MAXIMUM ALLOWABLE DIFFERENTIAL PRESSURE (ΔPMX)									
4,5 bar		**2**							
10 bar		**3**							
14 bar		**4**							
AUTOMATIC AIR VENT									
Bimetallic air vent (standard)			**V**						
None			**X**						
COVER CONNECTIONS									
None				**XX**					
3/8" threaded connections on top and bottom, closed with plugs (mandatory if any options are considered) *				**10**					
OPTIONS									
If any, these have specific separate ordering codes, please refer to the appropriate documentation									
SLR – STEAM LOCK RELEASE									
None					**X**				
With steam lock release assembled					**S**				
FLOW DIRECTION									
Inline horizontal from right to left (standard)						**IR**			
Inline horizontal from left to right						**IL**			
Inline vertical from top to bottom						**IT**			
PIPE CONNECTIONS									
Female threaded ISO 7 Rp							**A**		
Female threaded NPT							**C**		
Flanged EN 1092-2 PN 16							**L**		
SIZE									
1/2" or DN 15								**15**	
3/4" or DN 20								**20**	
SPECIAL CONSTRUCTION / ADDITIONAL OPTIONS									
A full description must to be provided and validated in case of a non-standard construction									**E**

* Not recommended with vertical flow direction, as the connections will be in the horizontal plane.